NOTES:

1. WE RECOMMEND HAND BRAKE TO BE APPLIED TO CAR AFTER BLASTING. WHEN SUBJECTED TO BLASTING, HAND BRAKE MUST BE PROTECTED FROM SHOT OR GRIT MATERIAL. REF. AAR FREIGHT CAR DESIGN SPECIFICATION PARA. 5.2.2
2. ALL DIMENSIONS ±1/16 UNLESS OTHERWISE SPECIFIED.
3. SEE DWG. DX-7900 FOR IDENTIFICATION OF PARTS.

LUBRICANT RESERVOIRS AND LUBRICATING POINTS INDICATED BY △L

REVISIONS				
ZONE	REV.	DATE	DESCRIPTION	APPROVED
	L	12/7/2007	REDRAWN IN SOLIDWORKS, ADDED ITEM 23 PER ECN 8176	RAL

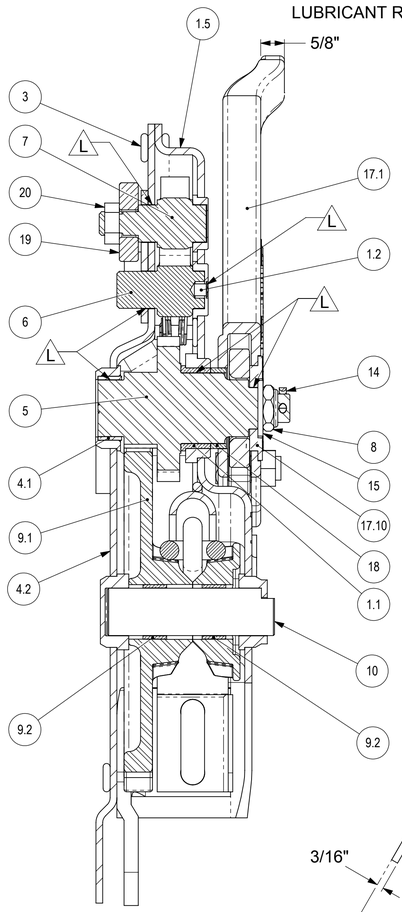

SECTION A-A

MOUNTING HOLES DRILLING DIAGRAM

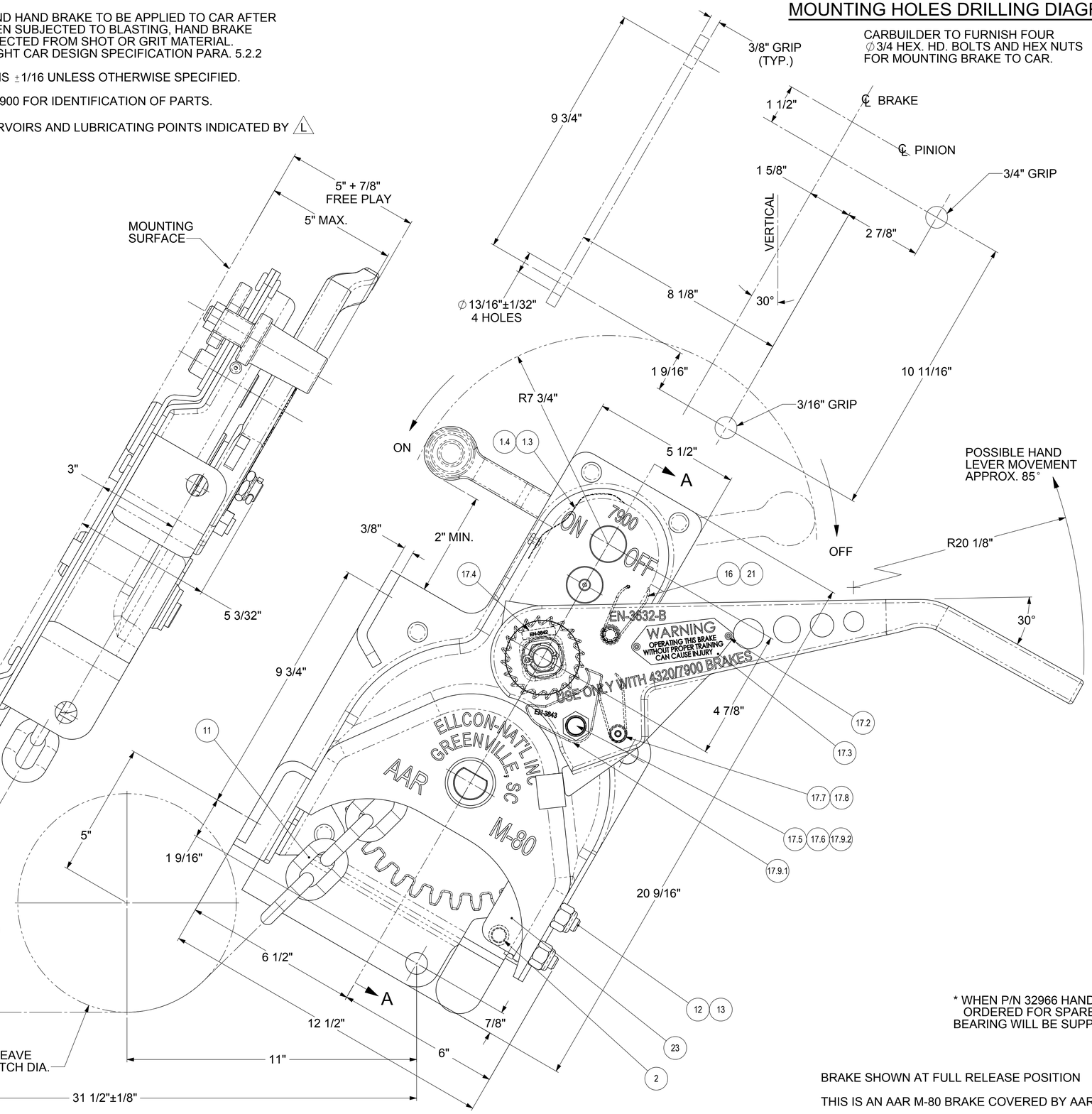

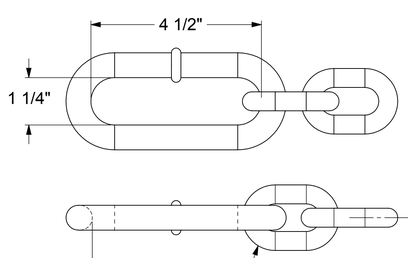

GENERAL DATA

BRAKE FURNISHED IN MALLEABLE IRON AND STEEL CONSTRUCTION, COATED WITH BLACK PRIMER

HORIZONTAL CHAIN TRAVEL WITH SHEAVE AND STANDARD CHAIN SHOWN - 16"

APPROXIMATE WEIGHT - 70 LBS.
AVERAGE FORCE PRODUCED (MIN.) - 4900 LBS.

	QTY.	PART NUMBER	DESCRIPTION	ITEM NO.
	1	7790	HOUSING ASSEMBLY	1
	1	8296	BEARING	1.1
	1	5892	OIL CUP	1.2
	1	9363	SPRING CAM SHAFT	1.3
	1	3669-8	RIVET	1.4
	1	7780-2	HOUSING	1.5
	1	3208-4	RIVET	2
	4	3208-16	RIVET	3
	1	7750	BAKE PLATE ASSEMBLY	4
	1	8399	BEARING	4.1
	1	7640	BACK PLATE	4.2
	1	1723-C	PINION	5
	1	1720-2	HOLDING PAWL	6
	1	1721	CAM	7
	1	4493-28	3/4-10 THIN HEX NUT	8
	1	7765	CHAIN GEAR ASSEMBLY	9
	1	7517	CHAIN GEAR	9.1
	2	8378	BEARING	9.2
	1	7448	SHAFT	10
	1	7973	CHAIN	11
	1	7476	U-BOLT	12
	2	4493-29	1/2-13 LOCK NUT	13
	1	4034-9	COTTER PIN	14
	1	3958-16	WASHER	15
	1	9088	HOLDING PAWL SPRING	16
*	1	32966	HAND LEVER ASSEMBLY	17
	1	3632-B	HAND LEVER	17.1
	2	3338-1	1/8 BLIND RIVET	17.2
	1	31818	WARNING LABEL	17.3
	1	3842	RATCHET	17.4
	1	4507	SHAFT	17.5
	1	3443-1	NUT	17.6
	1	1726	SPRING	17.7
	1	1437	1/4 DIA X 1 1/8 L ROLL PIN	17.8
	1	6443	PAWL ASSEMBLY	17.9
	1	3843	PAWL	17.9.1
	1	4477	BEARING	17.9.2
	1	32835	RETAINER	17.10
*	1	33686	BEARING	18
	1	1722-2	TRIP LEVER	19
	1	3443-1	NUT	20
	1	4049-1	SPRING RETAINING PUSH NUT	21
	1	1749	SHEAVE	22
	1	35467	CHAIN BRACKET	23

* WHEN P/N 32966 HAND LEVER ASS'Y IS ORDERED FOR SPARE PARTS, P/N 33686 BEARING WILL BE SUPPLIED WITH IT.

BRAKE SHOWN AT FULL RELEASE POSITION

THIS IS AN AAR M-80 BRAKE COVERED BY AAR CERTIFICATE NO. 69

ELLCON NATIONAL
50 BEECHTREE BLVD. GREENVILLE, S.C. 29605

MODEL 7900 BRAKE

SCALE	1:2	DATE	7-16-81	REV.
DRAWN	PRR	D-7900		L
CHECKED	DMS			