2 IF CORP. SHOES
L 57 3

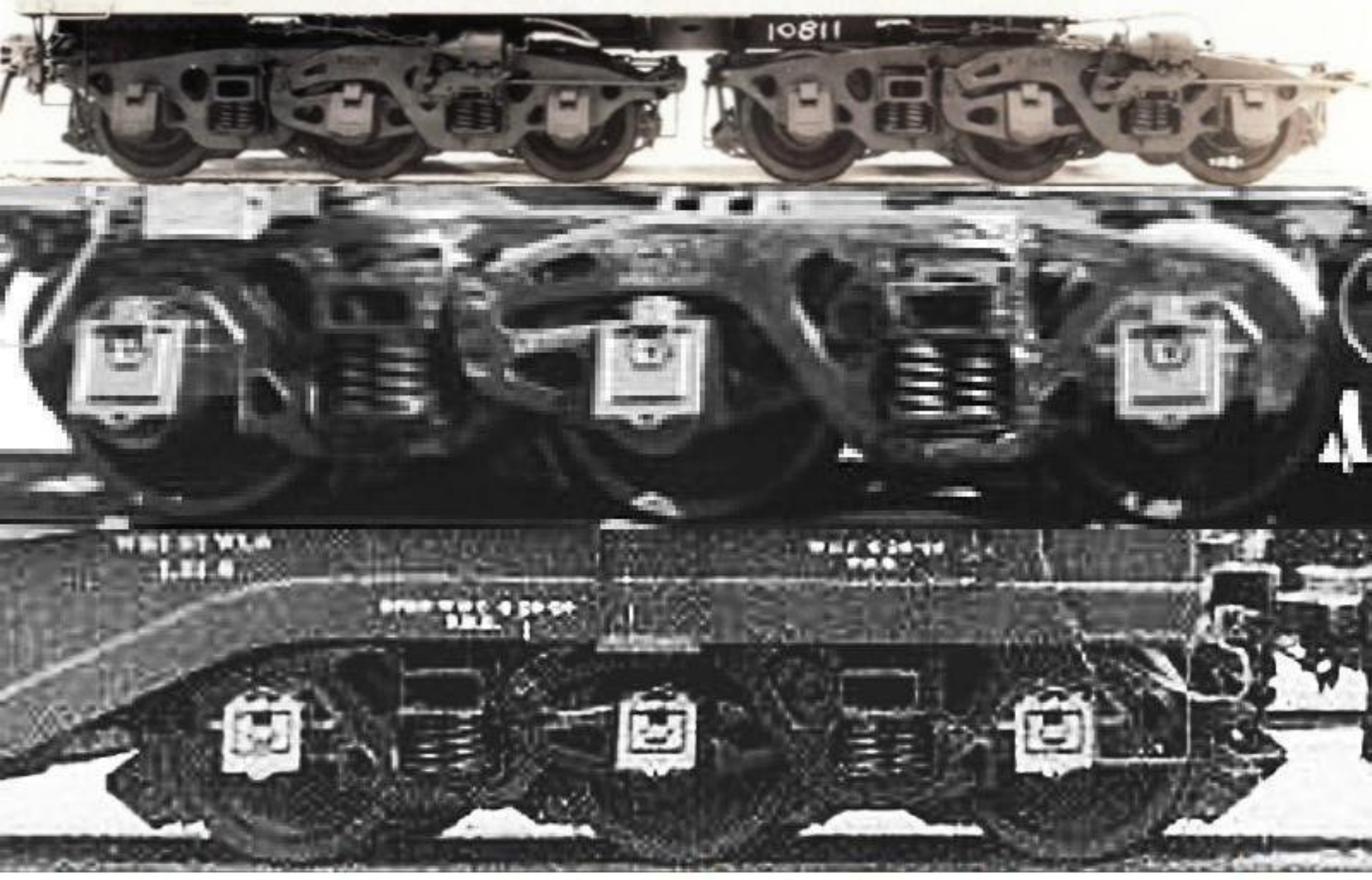
10811

BUCKEYE

TENDER AND FREIGHT CAR TRUCK

CLASS, 3F-F2 ---------- WT. 20100 LBS
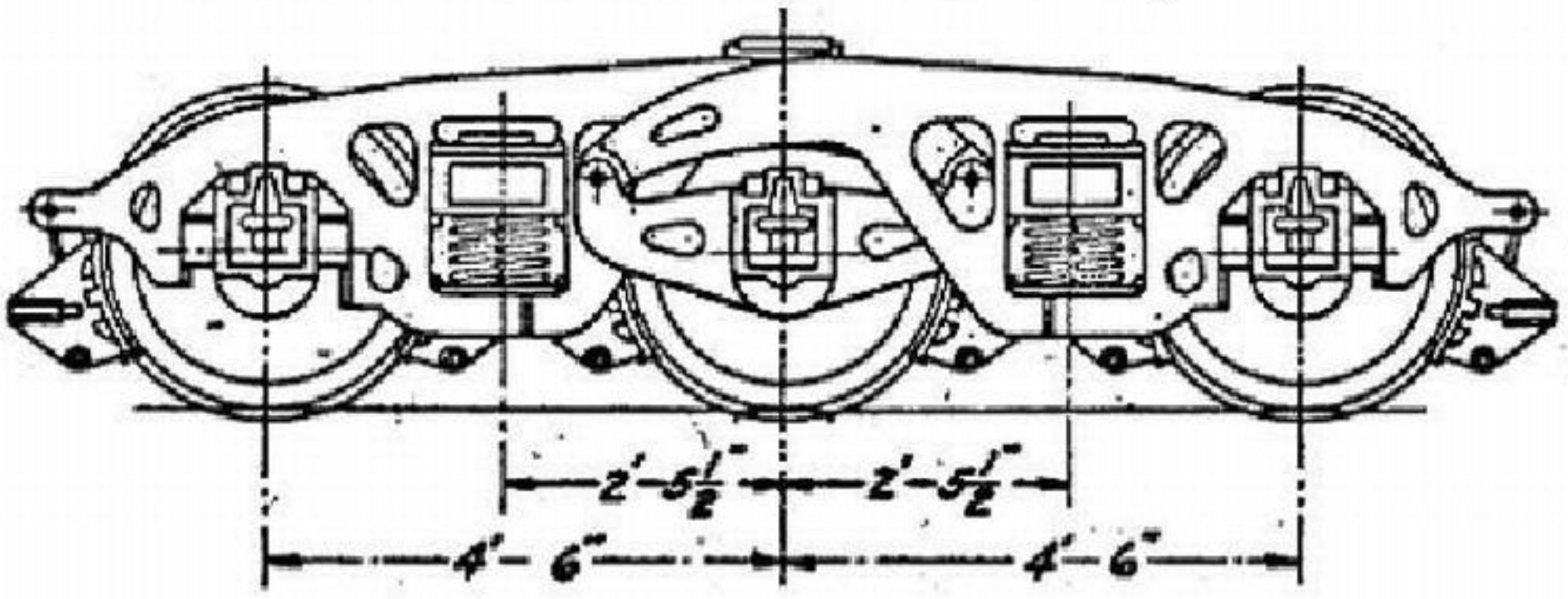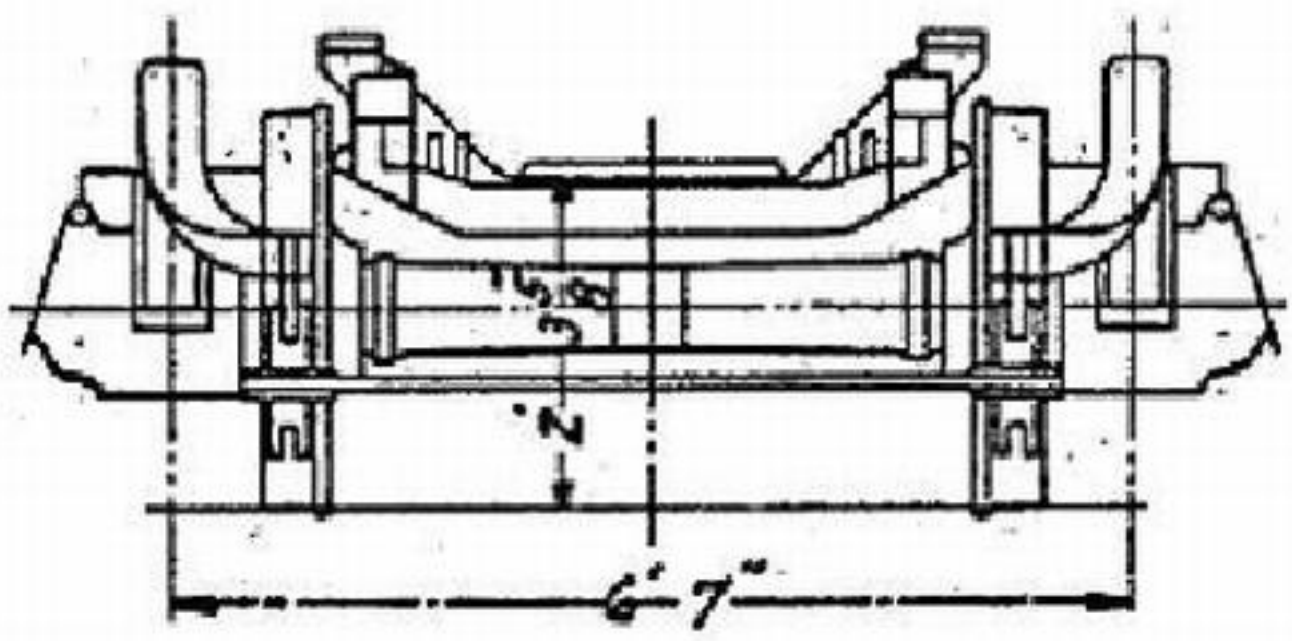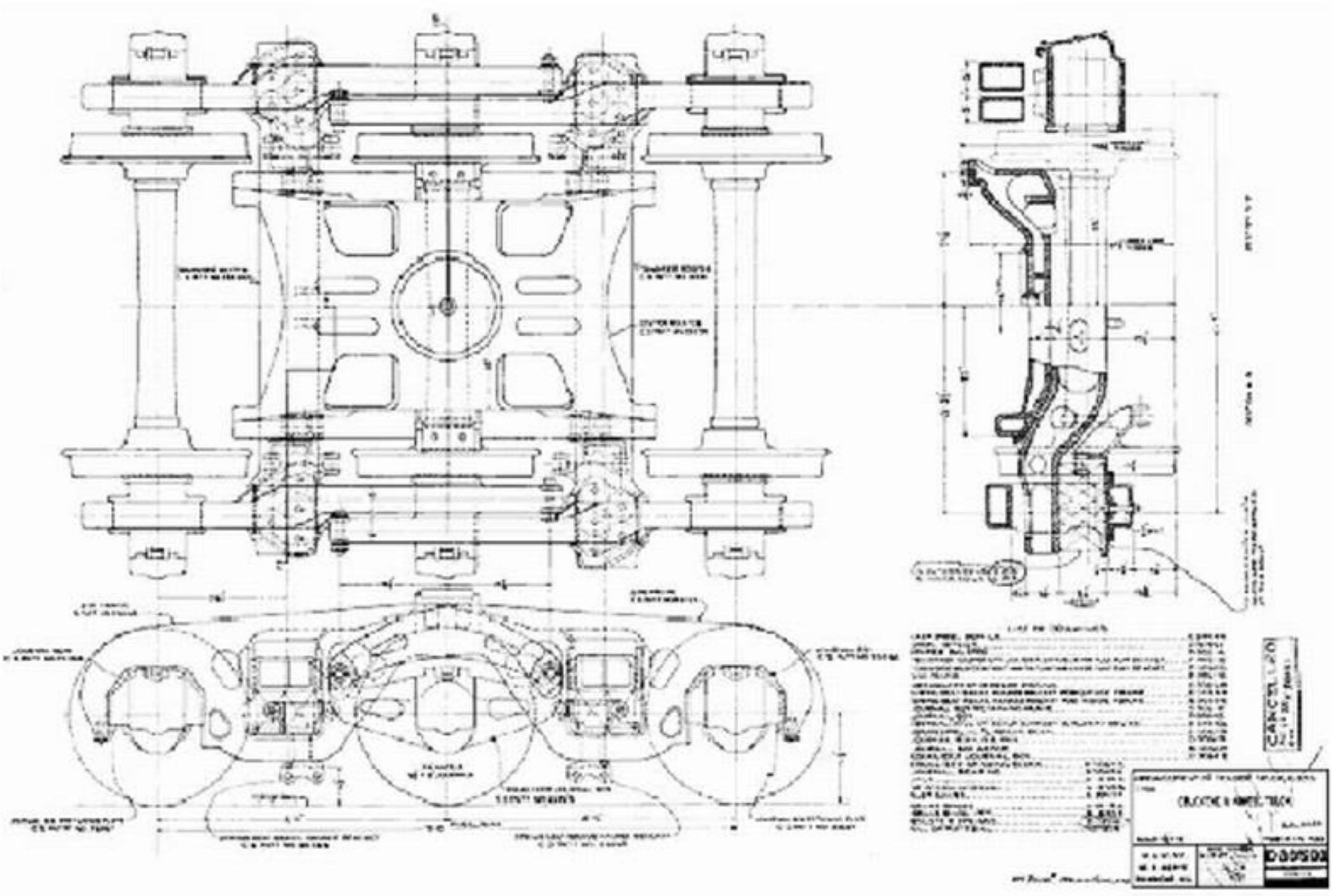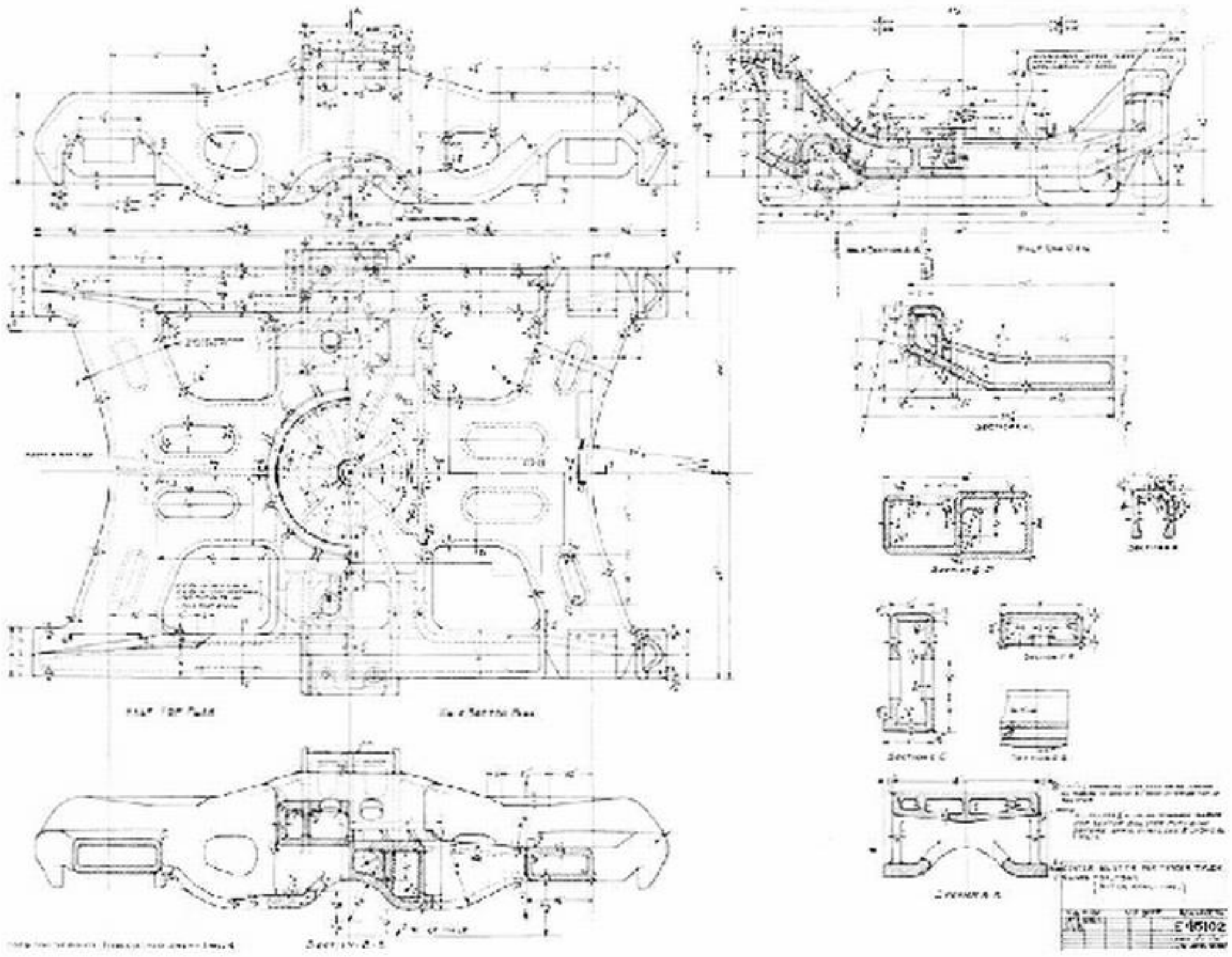
3F1T2, ----------
3F2T3 WITH S.K.F ROLLER BEARINGS,
3F3T4 WITH TIMKEN ROLLER BEARINGS, } WT. 20260 LBS